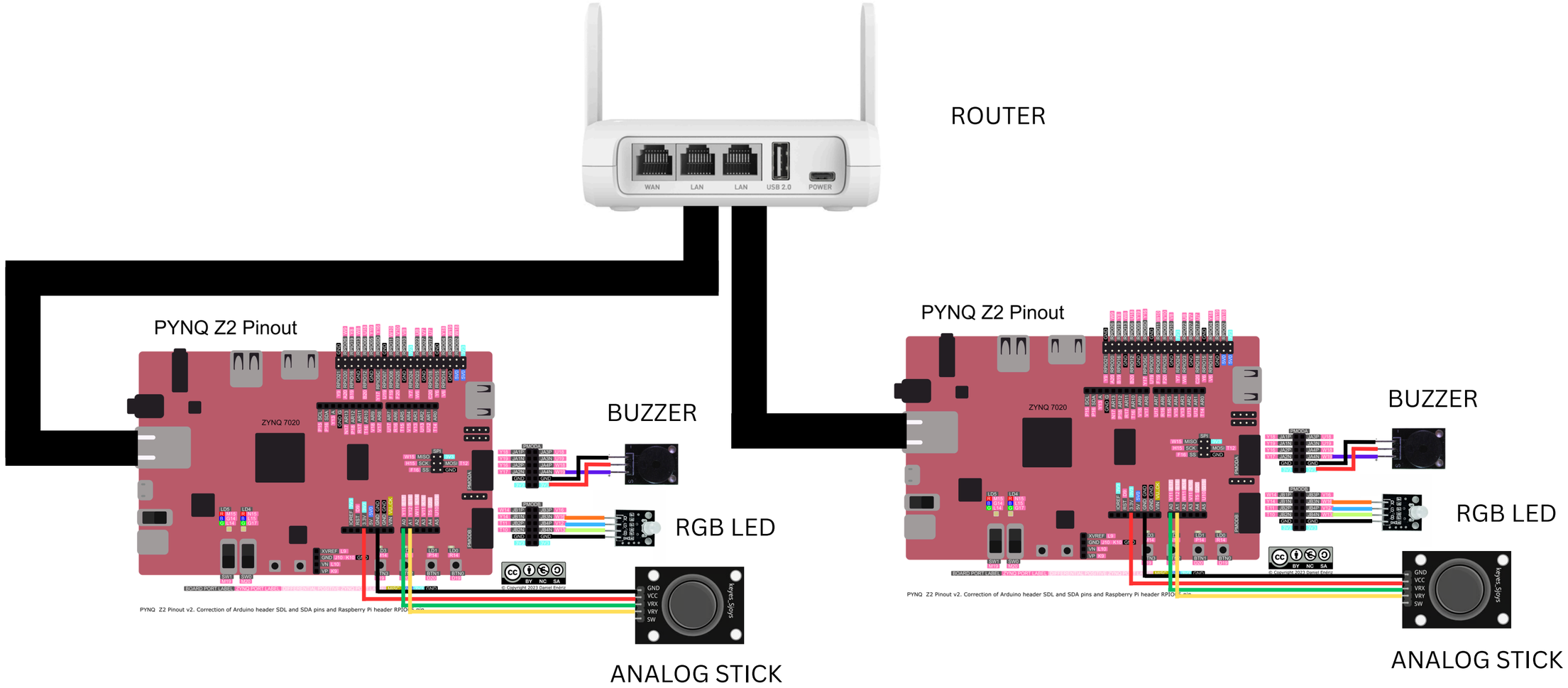SYSTEM SCHEMATIC